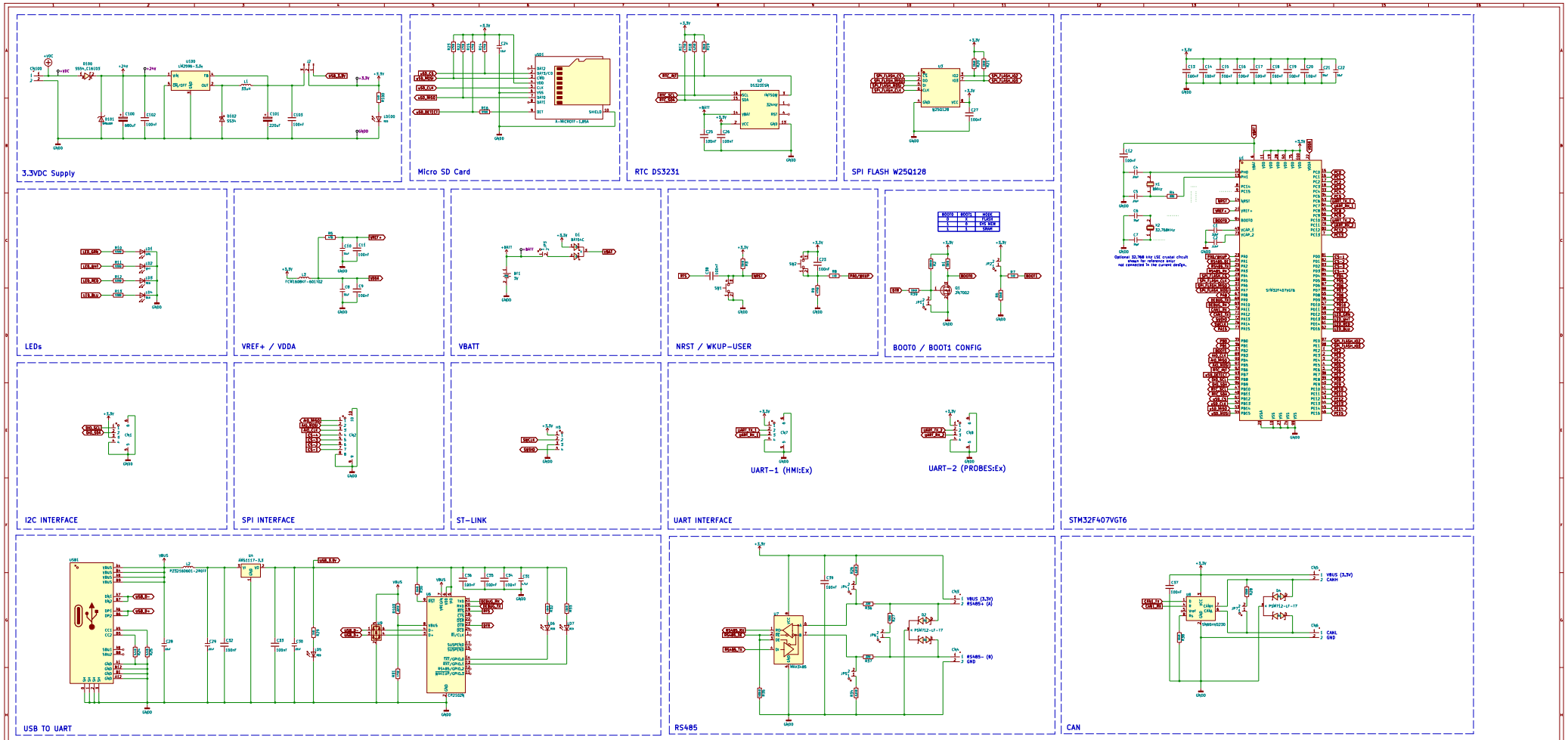

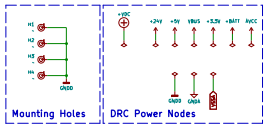

EA Control Tech
AUTOMATE · CONTROL · INNOVATE

www.eacontroltech.com
contact@eacontroltech.com
EA Control Tech
Sheets /
File: CPU_Board_STM32F407VGT6.kicad_sch
Title: CPU Board — STM32F407VGT6
Size: A1 | Date: 2026-05-03 | Rev: 1.0
KiCad 7.0.A, 9.0.0 | Id: 1/1